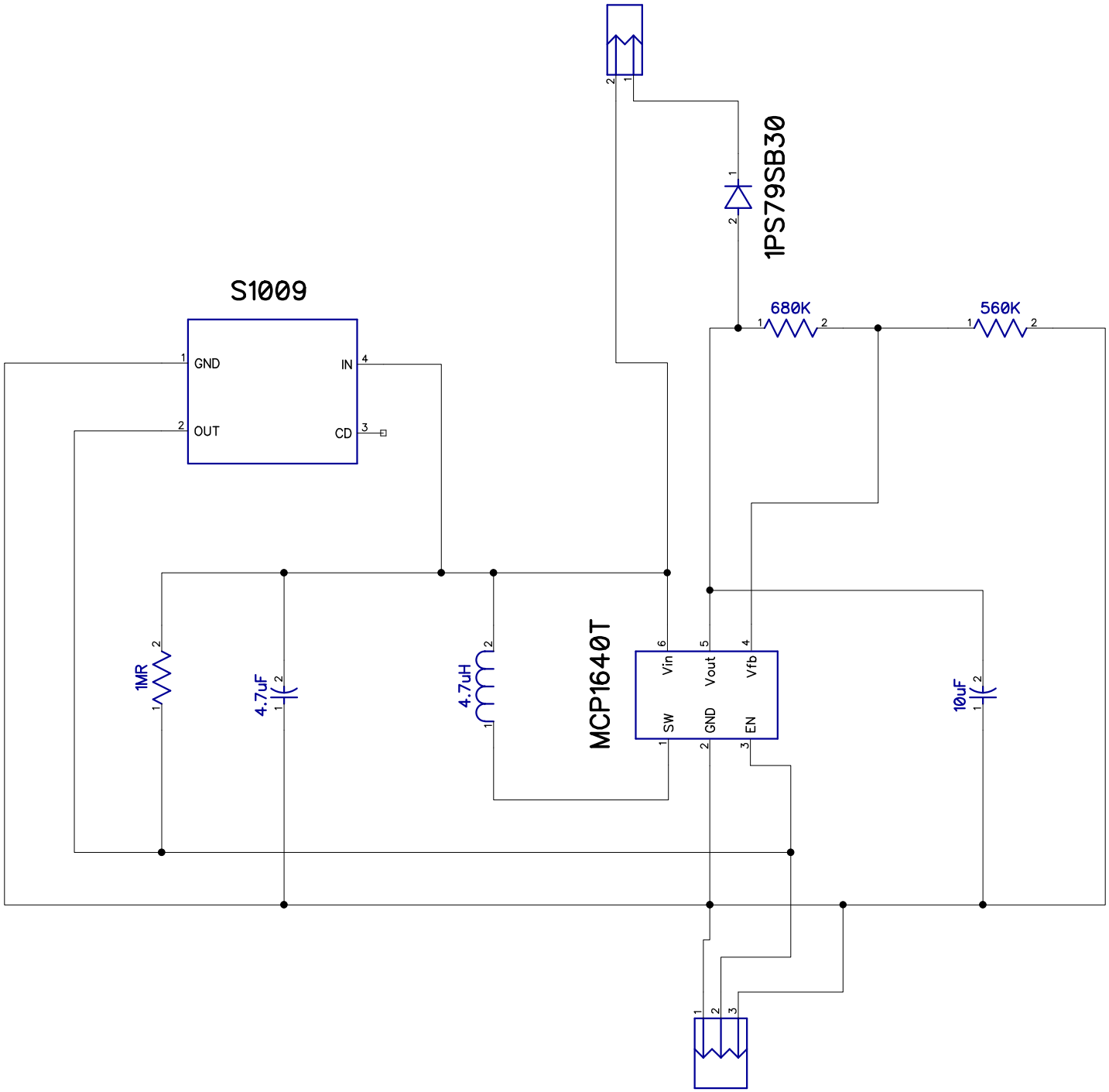
S1009
GND
OUT
IN
CD
1MR
4.7uF
4.7uH
MCP1640T
SW
Vin
GND
Vout
EN
Vfb
1PS79SB30
680K
560K
10uF